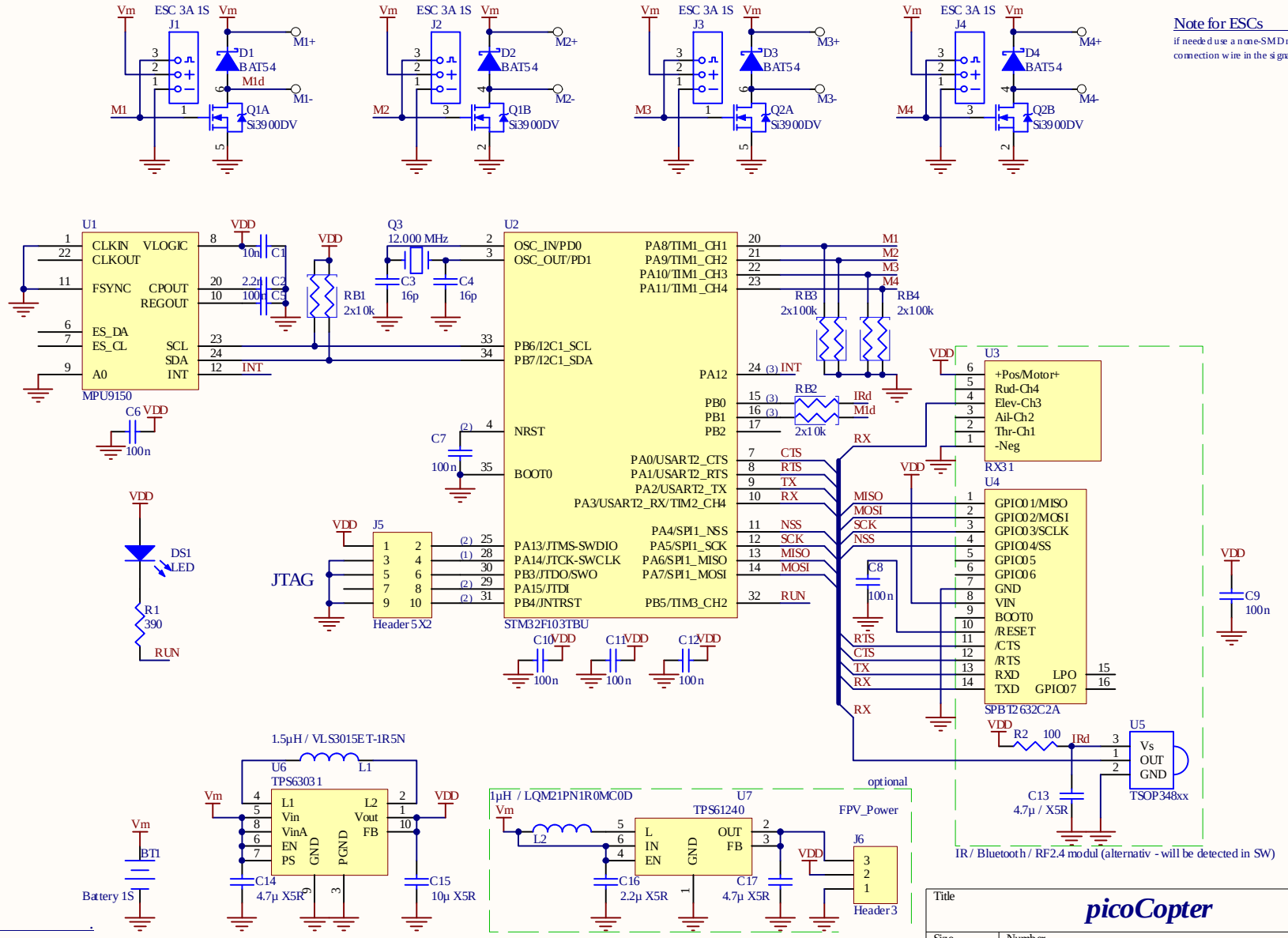

Note for ESCs

if needed use a none-SMD resistor of 1kOhm as connection wire in the signal line of every ESC

Agenda

(1) internal pulled-down
(2) internal pulled-up
(3) internal pulled-down by software

Title	**picoCopter**	
Size A4	Number	Revision **A**
Date: 30.05.2013		Sheet 1 of 1
File: D:__Boards__\..\picoCopter.SCHDOC		Drawn By: Frank Götze